Understand Door Handing Chart: A Visual Guide

Free Printable Preview | 39+ High-Resolution Sheets Available

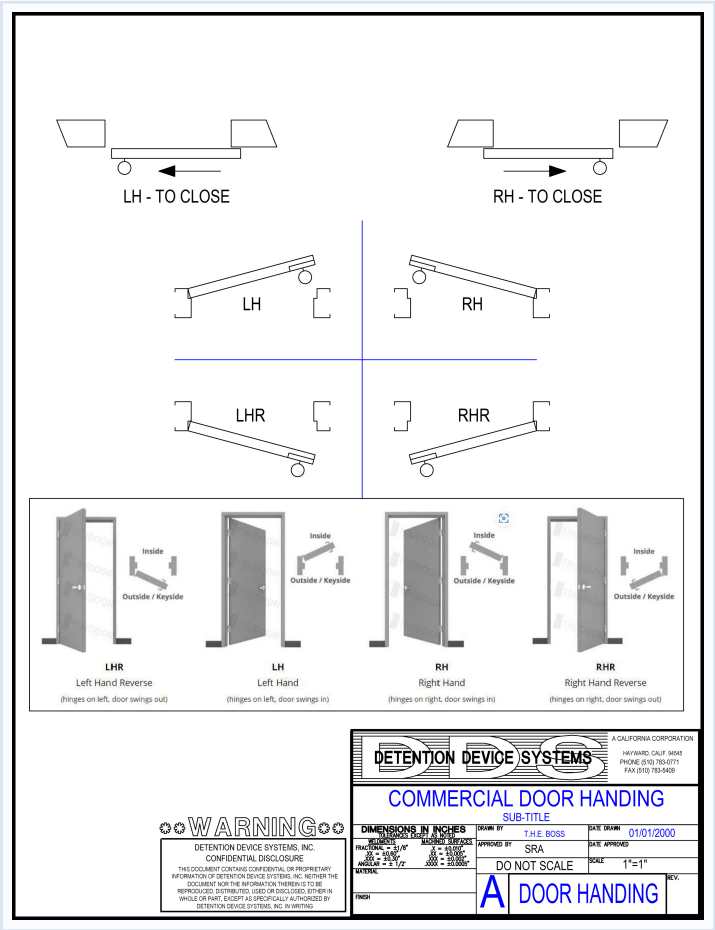

Printing & Usage Overview

You're probably here because you need a quick answer, right? Well, if you're looking for a door handing chart , you've come to the right place. It's a simple yet handy reference tool that tells you everything you need to know about door handing and its direction. This chart provides a clear visual guide, ensuring you get the door swing direction right, every time. Whether it's for a new installation or a quick fix, the door swing chart is your go-to resource, offering a standard way to determine the door handing direction and hinge placement. Understanding the Chart: A Quick Overview The door handing chart is a handy tool that simplifies the process of determining a door's handing and swing direction. It provides a visual reference, typically in the form of a diagram or table, to help you understand how a door should be installed and which way it should open. This chart is especially useful for ensuring proper door

Get All 39+ High-Resolution Printable Sheets (Free):

https://sandbox.independent.com/door-handing-chart

Personal & classroom use only. Set printer scale to Actual Size for best clarity.