Uncover the Secrets of Door Swing Charts

Free Printable Preview | 39+ High-Resolution Sheets Available

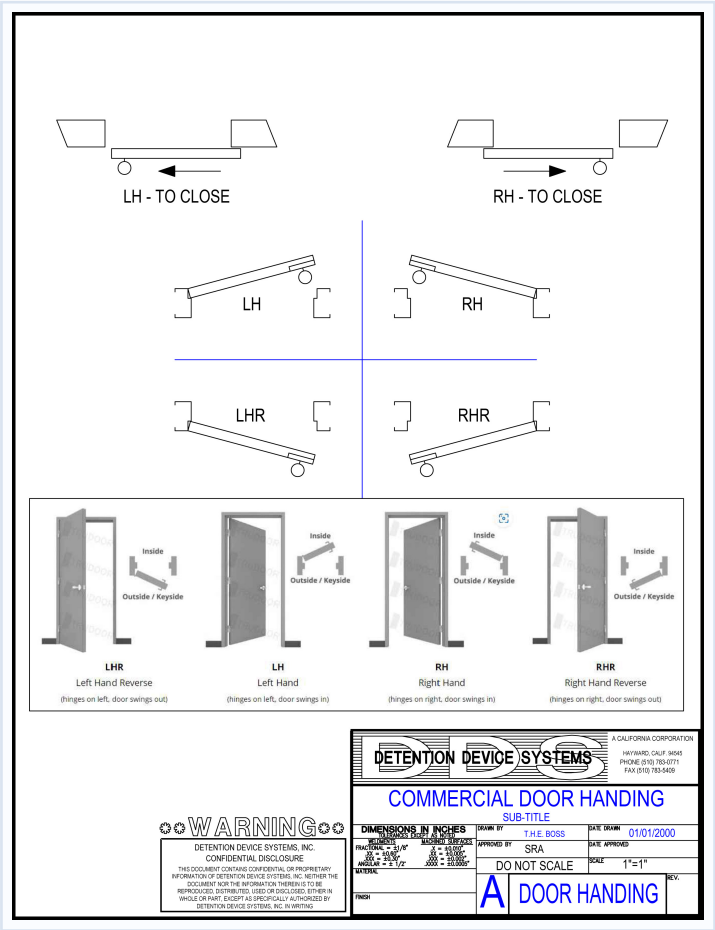

Printing & Usage Overview

You're probably familiar with the door swing chart ; it's a handy reference tool that quickly clarifies door swing direction and related details. This chart is your go-to guide, offering a simple visual representation to ensure you get the door swing direction and hand right. While the values and formats may vary depending on your region and specific context, the door swing chart provides a reliable framework to work from. Understanding Door Swing: A Practical Overview The door swing chart is an essential reference tool for anyone involved in construction, interior design, or even DIY projects. It provides a clear visual representation of standard door measurements and their swing directions. This chart is your guide to ensuring proper door installation and functionality. Comparing Door Swing Directions and Standards Door swing charts typically categorize doors based on their swing direction, which is

Get All 39+ High-Resolution Printable Sheets (Free):

https://sandbox.independent.com/door-swing-chart

Personal & classroom use only. Set printer scale to Actual Size for best clarity.